FEMALE END VIEW

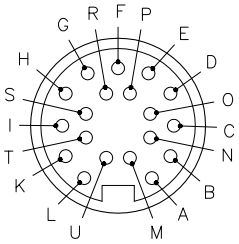

A = BLUE
B = GREY/PINK
C = RED/BLUE
D = WHITE/GREEN
E = BLACK
F = BROWN/GREEN
G = PINK
H = WHITE/YELLOW
I = GREEN
K = YELLOW/BROWN
L = BROWN
M = ORANGE
N = GREY/BROWN
O = VIOLET
P = WHITE
R = RED
S = GREY
T = YELLOW
U = TAN

M16 connector

SPECIFICATIONS

CONTACT CARRIER MATERIAL	NYLON
CONTACT MATERIAL/PLATING	BRASS/GOLD
HOUSING MATERIAL/PLATING	DIECAST ZINC/NICKEL
RATED CURRENT [A]	3.0 A
RATED VOLTAGE [V]	30 VAC/VDC
NUMBER OF CONDUCTORS [AWG]	19x24 AWG
TEMPERATURE RANGE	−30°C to +80°C (−22°F to +176°F)
PROTECTION CLASS	MEETS IEC IP67

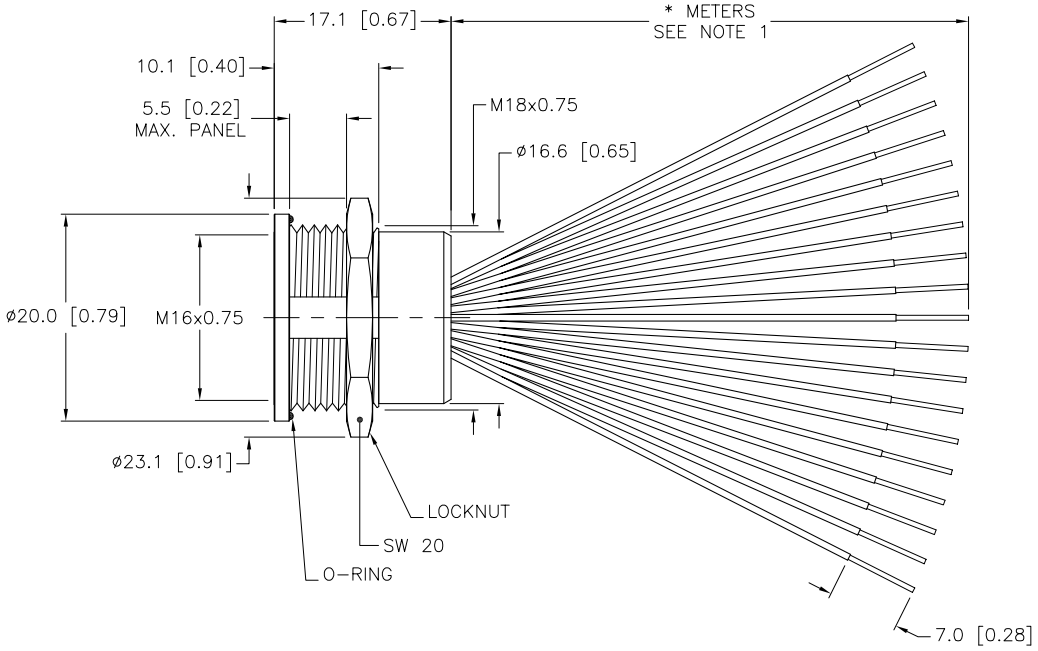

CABLE LENGTH	TOLERANCE
ALL LENGTHS	+ 4% (OR 50mm) OF LENGTH − 0% (OR 0mm) OF LENGTH WHICHEVER IS GREATER
STRIP LENGTH	**TOLERANCE**
0−7mm	±0.5mm
8−29mm	±1.0mm
30−49mm	±2.0mm
50−69mm	±3.0mm
70−100mm	±4.0mm
OVER 100mm	±5.0mm

NOTES:

1. "*" INDICATES LEAD LENGTH IN METERS. CONTACT TURCK TO ORDER SPECIFIC LENGTHS.

SOURCE DRAWING - FOR REFERENCE ONLY

REV	DESCRIPTION	BY	DATE	ECO NO.
C	UPDATE VOLTAGE	RDS	08/07/06	15757

RELATED DOCUMENTS
1.
2.
3.
4.

3RD ANGLE PROJECTION

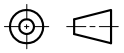

THIS DRAWING IS PROPERTY OF TURCK INC. USE OF THIS DOCUMENT WITHOUT WRITTEN PERMISSION IS PROHIBITED.

TURCK INC
High Technology Sensors and Automation Controls

3000 CAMPUS DRIVE
MINNEAPOLIS, MN 55441
1−800−544−7769
(763) 553−7300
(763) 553−0708 fax
turck.com

MATERIAL: SEE SPECIFICATIONS

FINISH: SEE SPECIFICATIONS

ALL DIMENSIONS DISPLAYED ON THIS DRAWING ARE FOR REFERENCE ONLY

CONTACT TURCK FOR MORE INFORMATION

DRFT: JBJ | DATE: 08/11/03
DSGN: | SCALE: 1=.7

UNIT OF MEASUREMENT
MILLIMETER [INCH]
DO NOT SCALE THIS DRAWING

DESCRIPTION: BKF 19−19−*

IDENTIFICATION NO.:

REV: C

FILE: 777002503

SHEET 1 OF 1