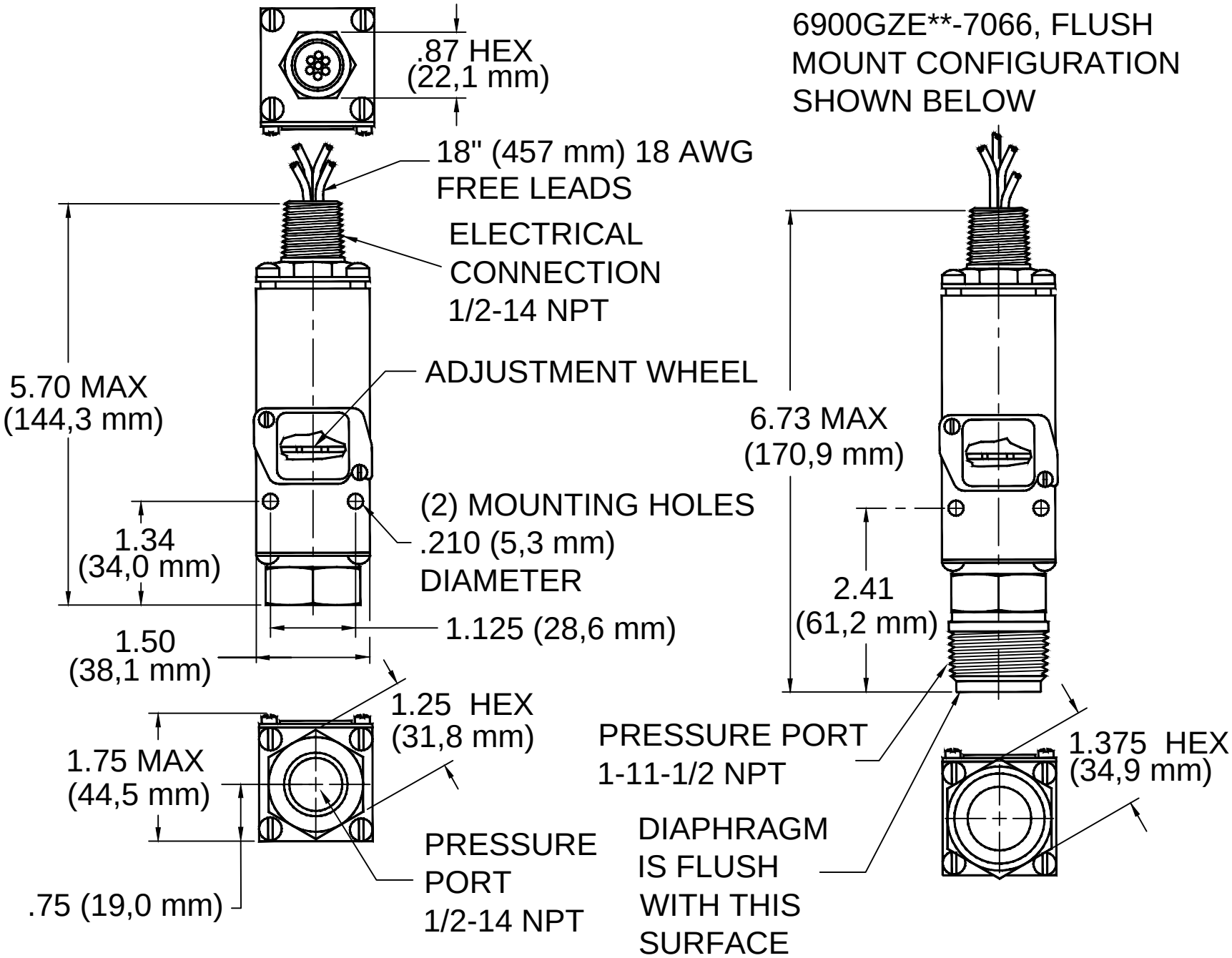
.87 HEX
(22,1 mm)
18" (457 mm) 18 AWG
FREE LEADS
ELECTRICAL
CONNECTION
1/2-14 NPT
ADJUSTMENT WHEEL
5.70 MAX
(144,3 mm)
(2) MOUNTING HOLES
.210 (5,3 mm)
DIAMETER
1.34
(34,0 mm)
1.125 (28,6 mm)
1.50
(38,1 mm)
1.25 HEX
(31,8 mm)
1.75 MAX
(44,5 mm)
PRESSURE
PORT
1/2-14 NPT
.75 (19,0 mm)
6900GZE**-7066, FLUSH
MOUNT CONFIGURATION
SHOWN BELOW
6.73 MAX
(170,9 mm)
2.41
(61,2 mm)
PRESSURE PORT
1-11-1/2 NPT
1.375 HEX
(34,9 mm)
DIAPHRAGM
IS FLUSH
WITH THIS
SURFACE